KIMES STEEL & RAIL, INC.

Rail Clip No. 120 - 9/16" x 15/16" Oval - Steel

PART # 2312016

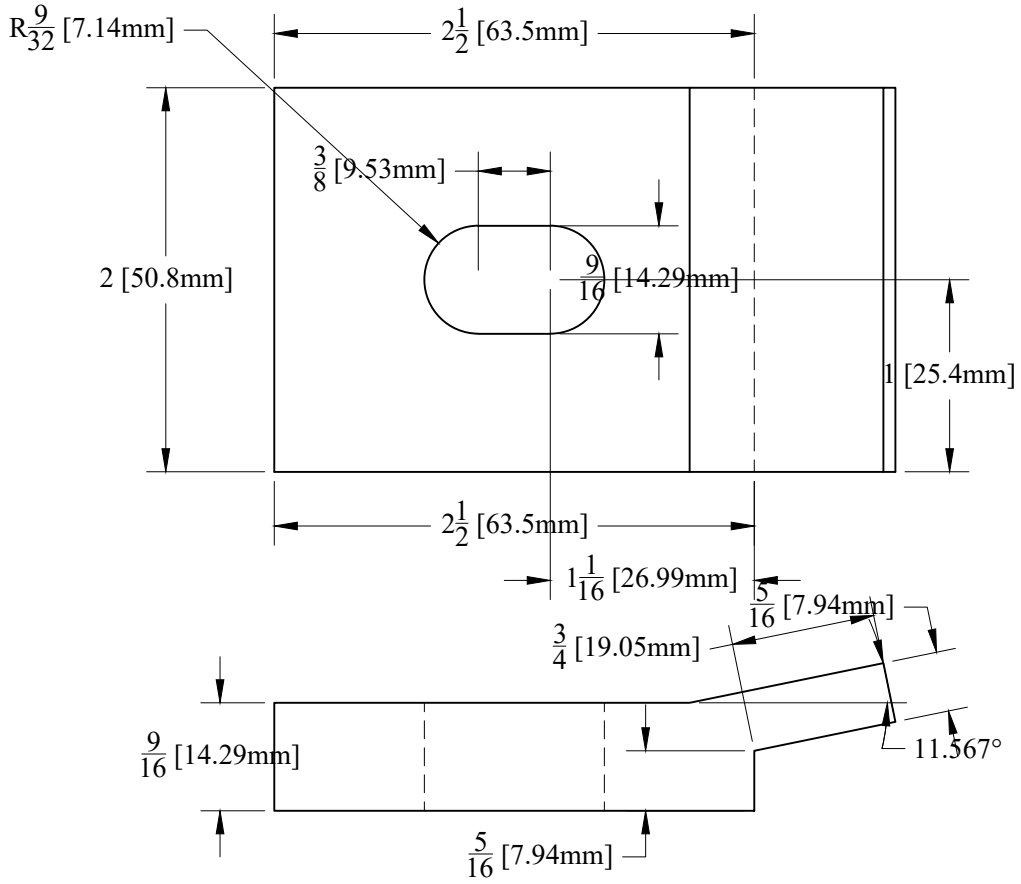

TYPICAL INSTALLATION (40 lb ASCE shown, not to scale)

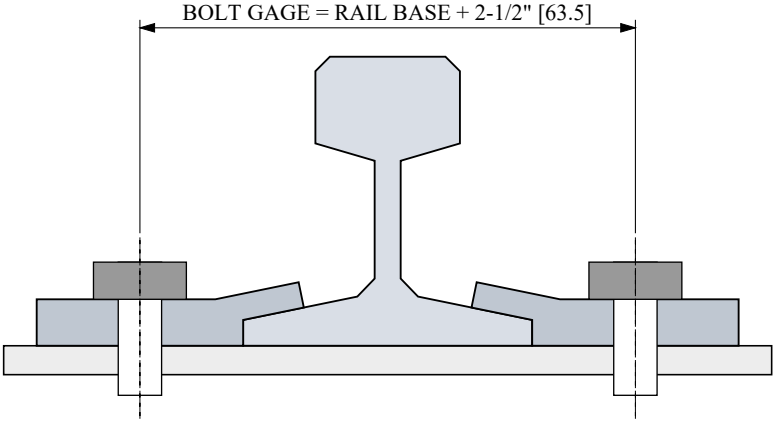

BOLT GAGE - CLIP No. 120		
RAIL	BASE in [mm]	BOLT GAGE in [mm]
25 lb ASCE	2-3/4" [69.8]	5-1/4" [133.3]
30 lb ASCE	3-1/8" [79.4]	5-5/8" [142.9]
35 lb ASCE	3-5/16" [84.1]	5-13/16" [147.6]
40 lb ASCE	3-1/2" [88.9]	6" [152.4]
45 lb ASCE	3-11/16" [93.7]	6-3/16" [157.2]
50 lb ASCE	3-7/8" [98.4]	6-3/8" [161.9]

TITLE	Rail Clip No. 120	UNITS	INCH	SCALE	1:1	DRAWN	DSK	DATE	11/23/2026

CLIP #	120	LBS / EACH	0.86 lbs / 0.39 kg
APPLICATIONS	25 to 50 lb ASCE & ARA		
STANDARD DRILLING	9/16" x 15/16" Oval		
BOLT	1/2"	ALL WEIGHTS BASED ON THEORETICAL VALUES	