KIMES STEEL & RAIL, INC.

Rail Clip No. 175 - 1-1/16" Round - Steel

PART # 2317515

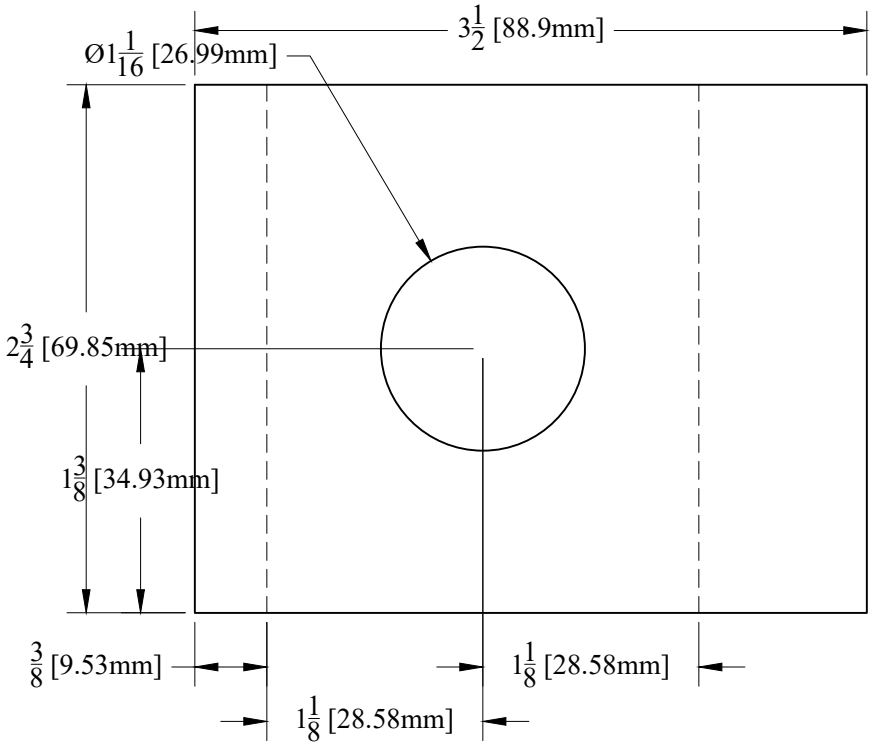

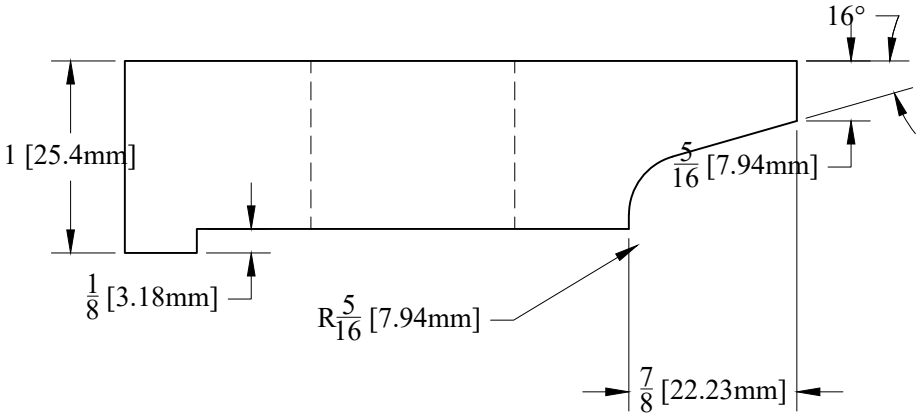

TYPICAL INSTALLATION (175 lb Crane shown, not to scale)

BOLT GAGE = RAIL BASE + 2-1/4" [57.1]

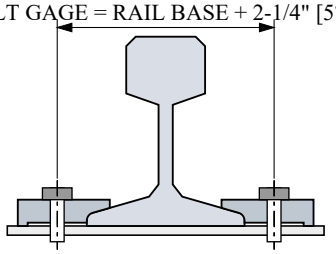

BOLT GAGE - CLIP No. 175		
RAIL	BASE in [mm]	BOLT GAGE in [mm]
175 lb Crane	6" [152.4]	8-1/4" [209.5]

TITLE	Rail Clip No. 175	UNITS INCH	SCALE 1:1	DRAWN DSK	DATE 11/23/2026

CLIP #	175	LBS / EACH	1.91 lbs / 0.87 kg
APPLICATIONS	175 lb crane		
STANDARD DRILLING	1-1/16" Round		
BOLT	1"	ALL WEIGHTS BASED ON THEORETICAL VALUES	