KIMES STEEL & RAIL, INC.

# Rail Clip No. 175 - 1-1/16" Round - Stainless 316

# PART # 2317525

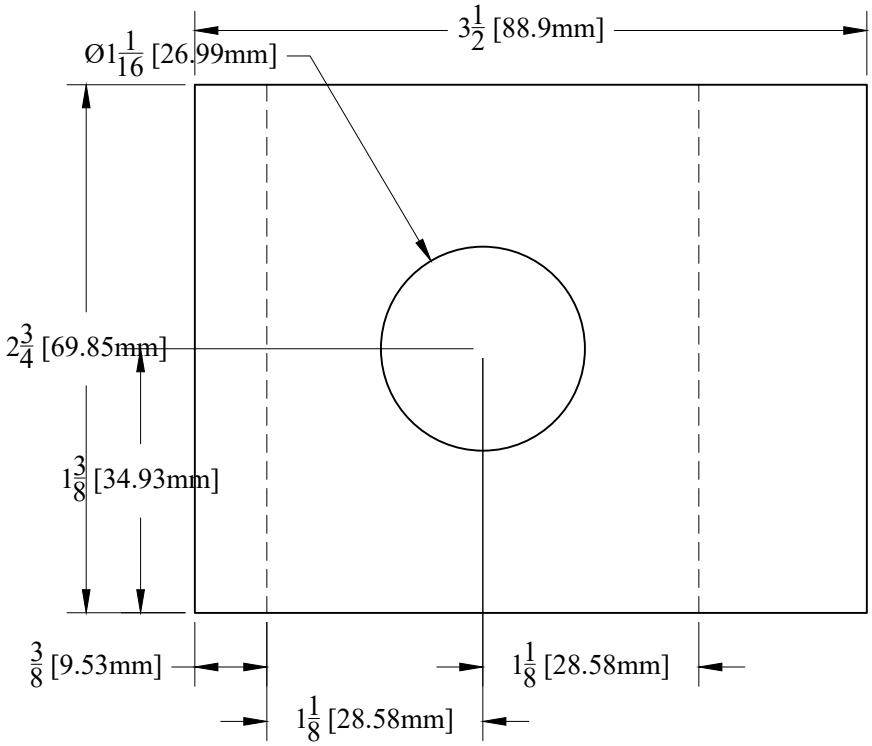


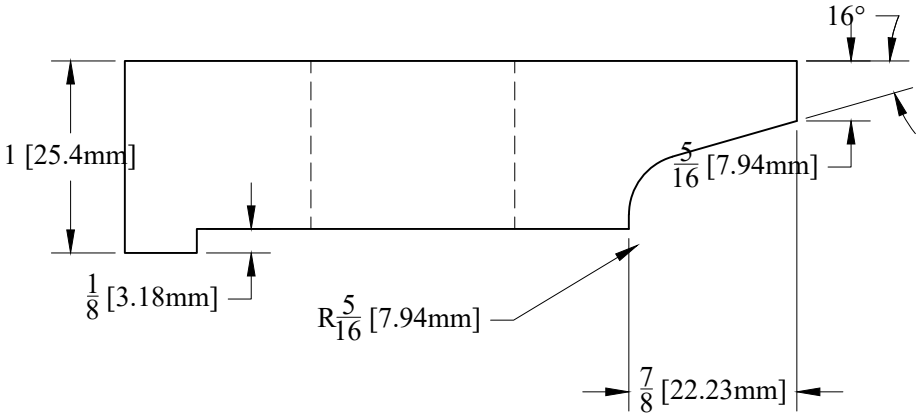


TYPICAL INSTALLATION (175 lb Crane shown, not to scale)

BOLT GAGE = RAIL BASE + 2-1/4" [57.1]

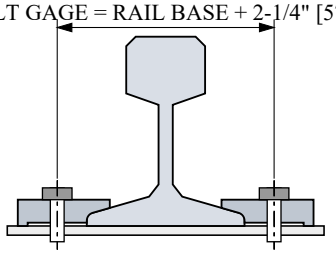

| BOLT GAGE - CLIP No. 175 | | |
|---|---|---|
| RAIL | BASE in [mm] | BOLT GAGE in [mm] |
| 175 lb Crane | 6" [152.4] | 8-1/4" [209.5] |

| | | | | | |
|---|---|---|---|---|---|
| TITLE | Rail Clip No. 175 | UNITS INCH | SCALE 1:1 | DRAWN DSK | DATE 11/23/2026 |

| | | | |
|---|---|---|---|
| CLIP # | 175 | LBS / EACH | 1.95 lbs / 0.89 kg |
| APPLICATIONS | 175 lb crane | | |
| STANDARD DRILLING | 1-1/16" Round | | |
| BOLT | 1" | ALL WEIGHTS BASED ON THEORETICAL VALUES | |