KIMES STEEL & RAIL, INC.

Rail Clip No. 62 - 15/16" Round - Stainless 316

PART # 2306224

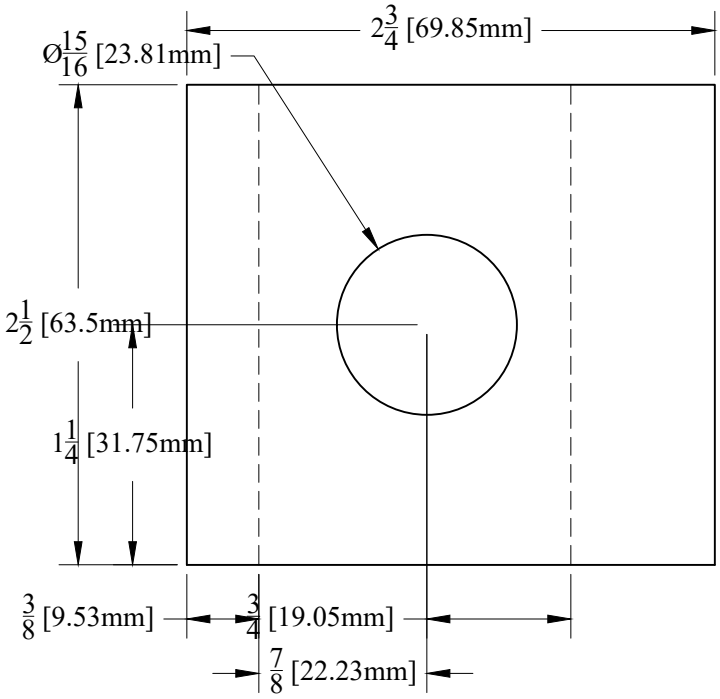

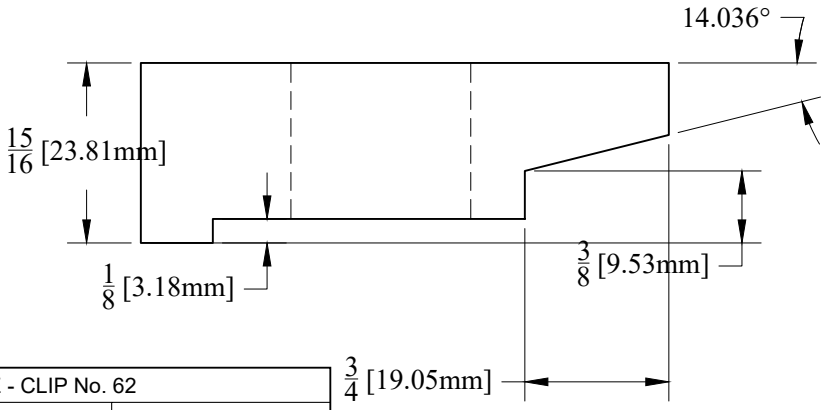

BOLT GAGE - CLIP No. 62		
RAIL	BASE in [mm]	BOLT GAGE in [mm]
115 lb AREA	5-1/2" [139.7]	7" [177.8]
119 lb AREA	5-1/2" [139.7]	7" [177.8]
132 lb AREA	6" [152.4]	7-1/2" [190.5]
133 lb AREA	6" [152.4]	7-1/2" [190.5]
136 lb AREA	6" [152.4]	7-1/2" [190.5]
140 lb AREA	6" [152.4]	7-1/2" [190.5]
90 lb ARA-A	5-1/8" [130.2]	6-5/8" [168.3]
100 lb ARA-A	5-1/2" [139.7]	7" [177.8]
104 lb Crane	5" [127.0]	6-1/2" [165.1]
105 lb Crane	5-3/16" [131.8]	6-11/16" [169.9]
135 lb Crane	5-3/16" [131.8]	6-11/16" [169.9]

TYPICAL INSTALLATION (140 lb AREA shown, not to scale)

BOLT GAGE = RAIL BASE + 1-1/2" [38.1]

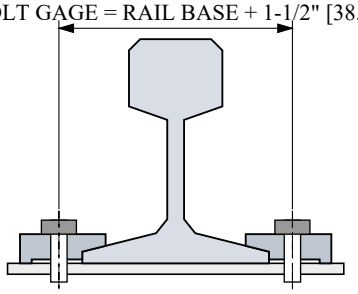

TITLE	Rail Clip No. 62	UNITS	INCH	SCALE 1:1	DRAWN DSK	DATE 11/23/2026
CLIP #	62			LBS / EACH	1.30 lbs / 0.59 kg
APPLICATIONS	115-140 lb AREA, 104-135 lb crane, 90-100 ARA-A, 130 PS				
STANDARD DRILLING	15/16" Round				
BOLT	7/8"			ALL WEIGHTS BASED ON THEORETICAL VALUES	